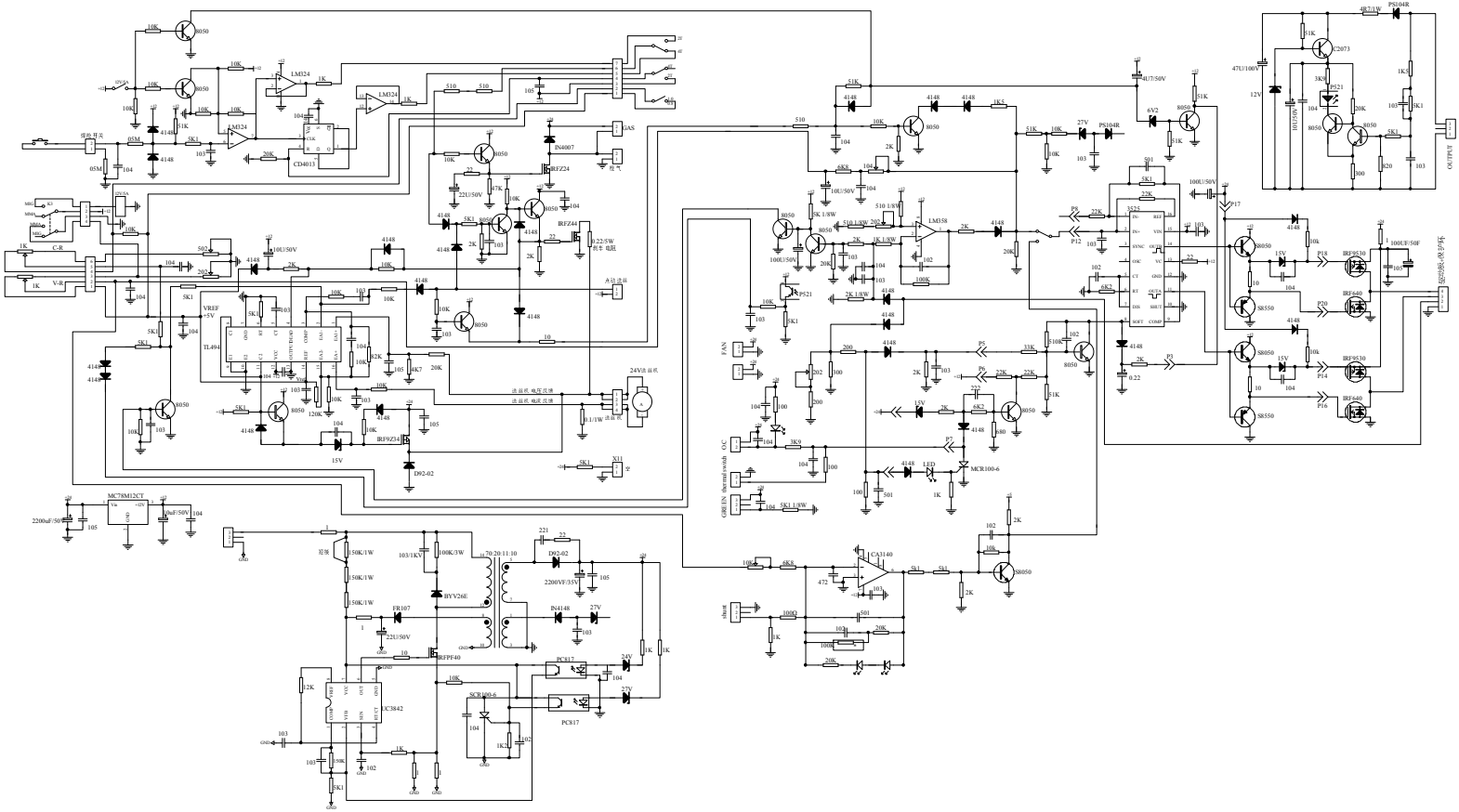

Title			
Size A1	Number		Revision
Date: June 2013		Sheet of	
File:	C:\Users\Administrator\Desktop\2013-06-05\	Drawn By:	